Sent to all bmr08

BIDP Contract Review Committee
BIDP CONTRACT
Comments/modifications by Ulf Söderström in green
An excellent principle format which will press for early settlement!
Thanks
Ulf

Other members still to give suggestions 14/10/08

SETTLEMENT OF DISPUTES – new Clause

Delete:

7.5 Arbitration heading and following Clause 7.50

Insert:

7.5 SETTLEMENT OF DISAGREEMENTS AND DISPUTES

7.50 Where any disagreement or dispute between the Employer or his Agents on the one hand and the Contractor or his Agents on the other hand, arising out of or concerning these Conditions cannot be resolved in accordance with Clause 7.40, the disagreement or dispute shall be submitted for resolution in the following order of precedence:

7.50.1 Amicable Negotiation between the parties and their advisors
7.50.2 Mediation between the parties and their advisors by an agreed Mediator
7.50.3 Adjudication between the parties and their advisors by an agreed Adjudicator
7.50.4 Arbitration between the parties and their advisors by an agreed Arbitrator

7.50.5 The Employer (or his Agents) or the Contractor (or his Agents) may identify and determine such a disagreement or dispute and shall by a written application declare the disagreement or dispute to the other party.

7.50.6 On submission of such a request, the disagreement or dispute with the detailed issues set out therein shall be deemed to exist between the parties.

7.50.1.1 A dispute shall be submitted to:

7.50.1.2 Amicable Negotiation in terms of 7.50.1

7.50.1.3 The parties shall within 7 (Seven) working days of the date on which the dispute was declared arrange for a meeting or series of meetings on agreed dates to discuss the resolution of the dispute.

7.50.1.4 The Claimant shall notify the detail of the dispute in writing and the Respondent shall notify the detail of any counter claim related to the dispute in writing.

7.50.1.5 The preliminary meeting shall address the definition of the areas in dispute and the parties will schedule further meetings to address the issues by reconciliation, bringing forward any pertinent supporting detail required.

7.50.1.6 The parties will agree a period of time in which the dispute will be resolved.

7.50.1.7 **In the event that no agreement can re reached in full or in part within the period agreed at the preliminary meeting (maximum 30 (Thirty) working days) or any agreed (~~such~~) extended period, the outstanding issues shall be referred to mediation by a person mutually agreed by the parties in writing.**

7.50.2.1 **A dispute shall be submitted to:**

7.50.2.2 **Mediation in terms of 7.50.2**

7.50.2.3 **The parties shall within 15 (Fifteen) working days of the date on which the dispute was declared, arrange to agree on and appoint in writing a Mediator to resolve the dispute in a meeting or series of meetings on agreed dates to discuss the resolution of the dispute.**

7.50.2.4 **The parties shall meet the Mediator and decide the agreed procedures, the representation and the dates for the mediation process. The Mediator may meet the parties individually or together to address the dispute to help the parties to reach a settlement.**

7.50.2.5 **The parties will agree a period of time in which the dispute will be resolved. In the event that no agreement can be reached in full or in part within 30 (Thirty) working days or any agreed (~~such~~) extended period, the outstanding issues shall be referred to adjudication by a person mutually agreed by the parties in writing.**

7.50.2.6 **Where any part or all of the dispute shall be agreed by the parties, the settlement shall be recorded by the Mediator and reduced to writing for the record upon which when signed and witnessed by the parties, shall become final and binding on the parties unless either disputes the record in writing within 7 (seven) calendar days.**

7.50.2.7 **The Mediation shall not be binding on the parties, unless so agreed, if a remainder or the entire dispute remains unresolved. The minutes of the meetings may be called ~~by~~ for use by ~~but~~ an Adjudicator or Arbitrator if agreed by the parties when duly appointed.**

7.50.3.1 **A dispute shall be submitted to:**

7.50.3.2 **Adjudication in terms of 7.50.3**

7.50.3.3 **The parties shall within 15 (Fifteen) working days of the date on which the continued dispute was declared arrange to agree on and appoint in writing an Adjudicator to resolve the dispute for a meeting or series of meetings on agreed dates to discuss the resolution of the dispute.**

7.50.3.4 **The parties shall meet the Adjudicator and decide the agreed procedures, the representation and the dates for the mediation process. The Adjudicator may meet the parties individually or together to address the dispute to help the parties to reach a settlement.**

7.50.3.5 **The parties will agree a period of time in which the dispute will be resolved. In the event that no agreement can be reached in full or in part within 30 (Thirty) working days or any agreed (such) extended period, the outstanding issues shall be referred to adjudication by a person mutually agreed by the parties in writing.**

7.50.3.6 **Where any part or all the dispute shall be agreed by the parties, the settlement shall be recorded by the Adjudicator and reduced to writing for the record upon which when signed and witnessed**

by the parties, shall become final and binding on the parties unless either disputes the record in writing within 7 (Seven) days.

7.50.3.7 Arbitration continues as in Clauses 7.50.4.3 to 7.50.4.8

7.50.3.8 ~~The parties shall within 15 (Fifteen) working days of the date on which the continued dispute was declared, arrange to agree on and appoint in writing, an Arbitrator Adjudicator to resolve the dispute in a meeting or series of meetings on agreed dates to discuss the resolution of the dispute.~~

7.50.3.8~~The parties shall meet the Arbitrator Adjudicator and decide the agreed procedures, the representation and the dates for the arbitration mediation process. The Arbitrator Adjudicator may meet the parties individually or together to address the dispute to help the parties to reach a settlement.~~

7.50.3.9 ~~The parties will agree a period of time in which the dispute will be resolved.~~

~~7.50.3.10 In the event that no agreement can be reached in full or in part within 30 (Thirty) working days or any such extended period, the outstanding issues shall be referred to adjudication by a person mutually agreed by the parties in writing.~~

7.50.4.1. A dispute shall be submitted to:

7.50.4.2 Arbitration in terms of 7.50.4

7.50.4.3 The parties shall within 15 (Fifteen) working days of the date on which the dispute was declared, arrange to agree on and appoint in writing an Arbitrator to resolve the dispute, where no Arbitrator is stated in the Contract Documents.

7.50.4.4 Where the parties make no such appointment, the Arbitrator shall be appointed by the President of the Botswana Institute of Development Professions.

7.50.4.5 The Arbitrator shall decide the agreed procedures, the representation and the dates for the arbitration process.

7.50.4.6 The Arbitrator shall have the powers to open or revise any certificate, opinion, decision, requisition or notice relating to such dispute as if no such certificate, opinion, decision, requisition or notice had been issued or given.

7.50.4.7 The Arbitrator shall be obliged to provide a reasoned award, unless otherwise agreed by the parties.

7.50.4.8 The cancellation of this agreement shall not affect the validity of clause 7.5

Botswana Institute of Development Professions

Ad-hoc Publications Review Committee

Members:

L Hutchings MBIDP 2005
G Vlug MBIDP 2005
D Young MBIDP-Chair 2005
B Alemarumo <Botswana Institute of Engineers 2006>
M Mogomela MBIDP 2007
A Hakim MBIDP 2007
U Soderstrom MBIDP 2007

Text received by executive secretary Ellen Tshoganetso

Submission 09oc08 by: D Young

Consultant Appointment

Existing 2000 edition 2005 revision page 5 Appendix C

APPENDIX C

1) Payment to the Consultant

.....

2) Stage payments

.....

3) Revision of rates

.....

4) Expenses

.....

5) Disbursements

EMAIL TO All committee
ON DATE 10/10/08
BY

.....

6) Interest on outstanding fees

Proposed:

APPENDIX C

1) Payment to the Consultant
(if none stated, other methods calculated will be on a time basis) If not otherwise specified in this document, payment is to (architects appt)

.....

2) Stage payments

.....

3) Revision of rates

.....

4) Expenses

.....

5) Disbursements

.....

6) Interest on outstanding fees If not otherwise specified ... prime + 2%

def.

.....

7) Indemnity Insurance (limit ~~P500,000.00~~) if not ... 1 million

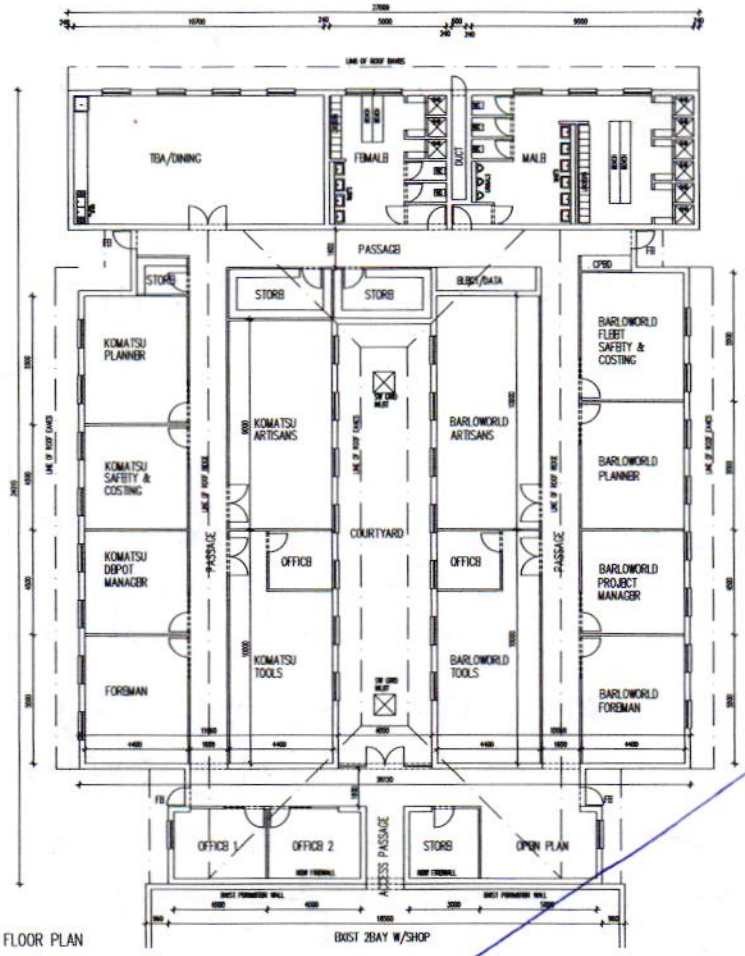

FLOOR PLAN

Issued for Approval

TITLE

DRG No

DETAIL

REFERENCES

REVISIONS

DAY 1

0915 REGISTRATION AND COFFEE
0945 INTRODUCTION

The President IAZ, Mr Graham R Price,
will introduce the President of the CAA

10.00 SESSION 1 CHAIRMAN

Current Changes in Architectural Practice John Wells-Thorpe

a)	Code Relaxations	Forms of practice; Simultaneous practice.
b) and	Monopolies Commission Government Attitudes:	Fee tendering; Client conditions; Restrictive practices.
c)	Developments in the Law:	Warranty; Professional liability; Methods of procurement.
d)	European Community and Quality Assurance	

Questions and Discussion

11.15 COFFEE

11.30 SESSION 2 CHAIRMAN:

The Architect as Contract Administrator. Stanley Cox

Architect's duty concerning supply of information
Issuing Instructions - concerning progress and programme-dealing with claims - certificates at completion - certificates of payment.

Questions and Discussion

12.45 LUNCH

14.00 SESSION 3 CHAIRMAN:

Subcontractors and Suppliers. Stanley Cox

Nominated and others ways of appointing subcontractors-tender documents and fair procedures -responsibility for workmanship and materials - programme and integration of specialist information -delays caused by subcontractors - determination and problems of replacement subcontractors.

Questions and Discussion.

15.15 TEA

BOTSWANA INSTITUTION OF DEVELOPMENT PROFESSIONALS

47

DATE: 03-12-92 04:25 pm
FROM: David Young, Architect RB37181
TO: C Ledona
CC:
SUBJECT: (ADKp)56 SADCC Union of Architects
ATTACH:

Attention: Mr Chris Ledona

Eva Gurney proposes a Council meeting in Gaborone on 9th/10th April to do necessary work prior to Windhoek assembly. Eva says she can drive you to Johannesburg for Windhoek flight after the meeting.

Eva has been unable to reach you by phone.

Yours faithfully,

David Young
4th March, 1992

cc: SADCC UA Secretary
File

Draft Programme Ralph Erskine Seminar/Workshop 5–10/7 1992
==========

Sun 5/7 at 16oo:

Introduction/presentation of RE and his works in the UB Exhibition Hall for specially invited guests (eg SADCC Union Arch/Plann, private consulting Arch/Plann in Botswana, Council Arch/Plann, Govt Arch/Plann, BHC Consult's Dept, Univ students).

Welcome to Guests (Res Rep/SwP)

Opening Speech (President SADCC UA)

Cocktail

Presentation by Ralph Erskine

==========

Workshop/seminar on "Creativeness/Design and Development Control"

1 Mon 6/7

Layout: Early mornings – presentation of issues
Late mornings/afternoons – Studio Work, c 6 teams, each guided by experienced Arch/Planners, designing a local centre with mixed land–uses, within the context of the new Dev Control Code.

8oo –10oo	"Architecture and Urban Design for Better Living" – Ralph Erskine
10oo–103o	Tea
103o–123o	"The New Development Control Code for Botswana" – Nils Viking
123o–14oo	Lunch at UB
14oo–17oo	Studio Work – Presentation of task (Gab West Block 8 Local Centre) RE + assistants available to advise on getting started, major design components, mixed uses etc

2 Tue 7/7

8oo –10oo	"Architecture and Planning in Botswana" – AC Mosha
10oo–103o	Tea
103o–123o	Studio Work – RE and assist available. RE to advise on upcoming design problems.
123o–14oo	Lunch at UB
14oo–17oo	Studio Work Cont

3 Wed 8/7

8oo –10oo	"The Role of Design Professions in the Society" – Paul Kotze
10oo–103o	Tea
103o–123o	Studio Work – RE + assist available
123o–14oo	Lunch at UB
14oo–17oo	Studio Work Cont

4 Thu 9/7

8oo –10oo	Studio Work – RE + assist available
10oo–103o	Tea
103o–123o	Studio Work Cont
123o–14oo	Lunch at UB
14oo–17oo	Studio Work Cont

5 Fri 10/7

8oo –10oo	Final touches to Studio Projects
10oo–103o	Tea
103o–123o	Presentations of Studio Works
123o–14oo	Lunch at UB
14oo–163o	Presentation Cont
163o–17oo	Winding Up – RE/Assistants
19oo	Reception UB Closing Remarks (Dir/DTRP)

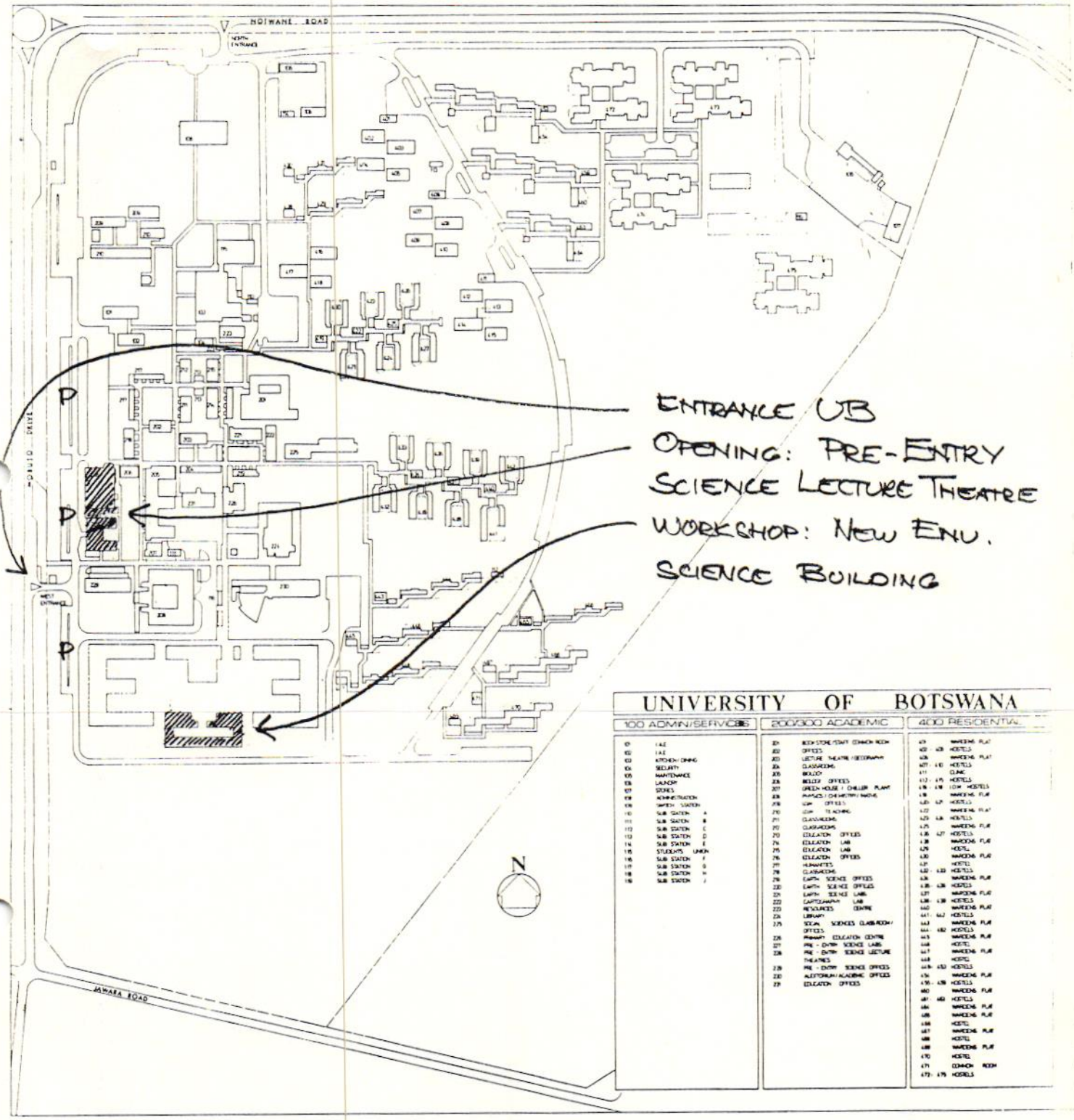

swedeplan
P.O. BOX 2182
TEL. 373839
FAX: 373473
GABORONE

from:
SADCC Union of Architects
Private Bag 00120
Gaborone, Botswana

1992 Ralph Erskine visit to Gaborone

Swedeplan Botswana has arranged for a one-week workshop on a town planning/ urban design project, under the guidance of Ralph Erskine, in Gaborone from 5th July to 10th July, 1992. The workshop is open to architecture & planning students (subject to limits on numbers in the event of overwhelming response). We aim to include a related but shorter workshop for architects in practice, on 6th and 7th July, following the opening at 4pm on Sunday 5th July.

If there is interest in attending, please contact Dukie Richardson at phone (+267) 352450, fax (+267) 373533 or David Young at phone+fax (+267) 371181 for further information.

A copy of the draft programme is included for information.

David Young
pp Secretary, SADCC UA

cc: Swedeplan
D Richardson
E Gurney
C Lebona
J Wasserfall
BIDP ATPI
IAZ
ZIA
AAT
MIA
Angolan Institute
NIA
LAESA
Schools: Kitwe, Cape Town, UN Durban, Wits, Pretoria, UPE
AUA
CAA

Draft Programme Ralph Erskine Seminar/Workshop 5–10/7 1992

==========

Sun 5/7 at 1600:

Introduction/presentation of RE and his works in the UB Exhibition Hall for spec invited guests (eg SADCC Union Arch/Plann, private consulting Arch/Plann Botswana, Council Arch/Plann, Govt Arch/Plann, BHC Consult's Dept, Univ studen

Welcome to Guests (Res Rep/SwP)

Opening Speech (President SADCC UA)

Cocktail

Presentation by Ralph Erskine

==========

Workshop/seminar on "Creativeness/Design and Development Control"

1 Mon 6/7

Layout: Early mornings – presentation of issues
Late mornings/afternoons – Studio Work, c 6 teams, each guided by experienced Arch/Planners, designing a local centre with mixed land–use within the context of the new Dev Control Code.

800 –1000	"Architecture and Urban Design for Better Living" – Ralph Erskin
1000–1030	Tea
1030–1230	"The New Development Control Code for Botswana" – Nils Viking
1230–1400	Lunch at UB
1400–1700	Studio Work – Presentation of task (Gab West Block 8 Local Cen RE + assistants available to advise on getting started, major d components, mixed uses etc

2 Tue 7/7

800 –1000	"Architecture and Planning in Botswana" – AC Mosha
1000–1030	Tea
1030–1230	Studio Work – RE and assist available. RE to advise on upcoming d problems.
1230–1400	Lunch at UB
1400–1700	Studio Work Cont

3 Wed 8/7

800 –1000	"The Role of Design Professions in the Society" – Paul Kotze
1000–1030	Tea
1030–1230	Studio Work – RE + assist available
1230–1400	Lunch at UB
1400–1700	Studio Work Cont

4 Thu 9/7

800 –1000	Studio Work – RE + assist available
1000–1030	Tea
1030–1230	Studio Work Cont
1230–1400	Lunch at UB
1400–1700	Studio Work Cont

5 Fri 10/7

800 –1000	Final touches to Studio Projects
1000–1030	Tea
1030–1230	Presentations of Studio Works
1230–1400	Lunch at UB
1400–1630	Presentation Cont
1630–1700	Winding Up – RE/Assistants
1900	Reception UB Closing Remarks (Dir/DTRP)

UNESCO

XI INTERNATIONAL UIA/UNESCO SEMINAR

In Chania/Creta, Greece

Planning and Design of Higher Educational Facilities

Working Document

D. Moolj, the Netherlands
august 1992

ΤΕΧΝΙΚΟ ΕΠΙΜΕΛΗΤΗΡΙΟ ΕΛΛΑΔΑΣ
ΕΛΛΗΝΙΚΟ ΤΜΗΜΑ UIA - ΔΙΕΘΝΟΥΣ ΕΝΩΣΗΣ ΑΡΧΙΤΕΚΤΟΝΩΝ
UIA - ΟΜΑΔΑ ΕΡΓΑΣΙΑΣ «ΧΩΡΟΙ ΕΚΠΑΙΔΕΥΣΗΣ & ΠΟΛΙΤΙΣΜΟΥ» - UNESCO

TECHNICAL CHAMBER OF GREECE
HELLENIC SECTION OF UIA (INTERNATIONAL UNION OF ARCHITECTS)
UIA WORKING GROUP "EDUCATIONAL AND CULTURAL SPACES" - UNESCO

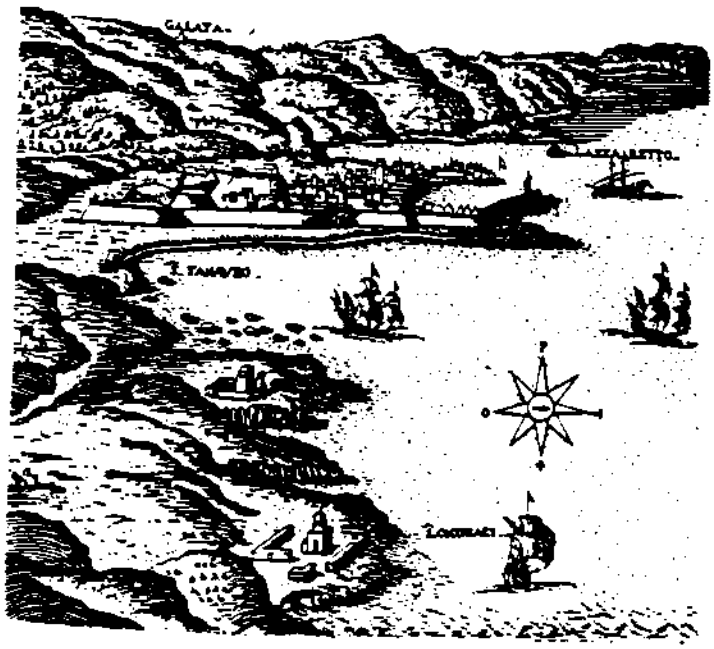

XI ΔΙΕΘΝΕΣ ΣΕΜΙΝΑΡΙΟ
«ΠΡΟΓΡΑΜΜΑΤΙΣΜΟΣ ΚΑΙ ΣΧΕΔΙΑΣΜΟΣ ΕΓΚΑΤΑΣΤΑΣΕΩΝ ΑΝΩΤΑΤΗΣ ΕΚΠΑΙΔΕΥΣΗΣ»

ΧΑΝΙΑ, 21-25.9.1992

XI INTERNATIONAL SEMINAR
"PLANNING AND DESIGN OF HIGHER EDUCATIONAL FACILITIES"

CHANIA - CRETE, 21-25.9.1992

1. General Introduction

The International Union of Architects (UIA) has established a number of working groups which pursue issues relating to the design and construction of various building types.

Since the establishment of the UIA Working Group "Educational and Cultural Spaces", the main aim of it has been this specific one of the Union:

"exchange of knowledge and experience between different countries".

During the past 35 years the WG has followed the evolution of school and society and has changed significally its name: Commision on "School Constructions" at the beginning, Working Group on "Educational Spaces" during the seventies and, recently, Working Group on "Educational and Cultural Spaces.
The UIA working group "Educational and Cultural Spaces" has focussed its attention both at educational and cultural spaces themselves and more broadly at their link with the changing character of the societies in which they are located.

The questions which have been posed and discussed were new questions for which new answers were every time needed.
They are questions of planning, design, construction and of functioning.
The principal activity of the Working Group during the past decades has been the organization of 10 International Seminars with the support of the UNESCO and the host country. For the XI Seminar The Technical Chamber of Commerce of Greece, the Hellenic Section of UIA is co-organizer.

The 10 International Seminars were the following:

1.	1970, Vienna	"The Social role of the School".
2.	1974, Berlin	"Flexibility of buildings for education".
3.	1976, Athens	"Integration of educational and community facilities".
4.	1978, Dakar	"Self-Reliance on educational facilities".
5.	1979, Washington	"Community participation on comprehensive social facilities".
6.	1983, Bangkok	"Educational facilities in the city: the challenge in Asia and the Pacific".
7.	1985, Paris	"The wider use of educational spaces".
8.	1988, Budapest	"international information network on educational buildings and furniture".

In 1972 a decision was taken to integrate the regional school building programme into the UNESCO Regional Offices for Education. Thus, the conditions were created in the regions and at headquarters for interdisciplinary work.

Since 1962 UNESCO has carried out a significant number of studies on the design of buildings and furniture which remain an important source of fundamental data.

The four programme actions of UNESCO's educational building programme are:

I. Exchange of Information and the publication of Research Studies.
II. Technical cooperation with Member States.
III. Training of national specialists.
IV. Pilot projects.

UNESCO has become aware, over the years, of the need for a continuous and growing exchange of information in the field of educational buildings and furniture. As a part of programme action I. above, UNESCO supports every two years the organization of an international seminar by the Working Group on Educational and Cultural Spaces of the UIA to discuss basic concepts in the planning, design and use of educational buildings.

2. Planning and Design of Higher Educational Facilities.

The subject of the XI Seminar of UIA/UNESCO: "Planning and Design of Higher Educational Facilities" covers a very wide range of aspects. Looking back at the subjects of the ten previous Seminars, it is striking, that these are all relevant for Higher Educational Facilities. In fact this is not surprising as changes in society should be reflected in Higher Educational Facilities especially. The facilities ar more than only a factory for learning and research: the fact that young people are being trained to be skilled members of society has to find its expression in the architecture and landscaping of the built environment and visual arts intergrated in it. Because this physical environment can shape our sensibilities, we can use it to enhance the quality of life. Besides, Higher Educational Facilities are one of the most complex building types. They have to accommodate functionally very different and complex activities, varying from office activities and small group teaching to very complex and sometimes even environmentally hazardous research and laboratory teaching activities.
These facilities require relatively high investment and running costs; efficiency and effectiveness requirements result in high demands on planning, design and facility management.

The wide range of aspects that are covered by the subject of the XI Seminar makes a certain limitation and structuring necessary in line with the objectives of the Seminar.

In this regard it is proposed to focus the XI Seminar on recent and expected future changes relevant to Higher Educational Facilities.
As a point of departure for these changes, three major UNESCO publications on Higher Educational Facilities from the seventies are taken:
1. The design of polytechnic institute buildings, 1972
2. Planning Buildings and Facilities for Higher Education, 1975
3. Planning Standards for Higher Educational Facilities, 1979.
The three publications give a good picture from "the state of the art" with regard to Higher Educational Facilities planning, programming, design and management in the seventies. The decades before are marked by growth of Higher Educational Systems, however, so that the construction of new buildings was the major issue.

5.2. Framework for the positioning of subjects of change.

I. National level	1. Policymaking
↕	2. Educational Planning
	3. Facility Planning (macro)
II. Institutional level	4. Policymaking
↕	5. Academic Planning
	6. Facility Planning (micro)
	7. Project definition
III. Level of organisational unit, project, building	8. Brief development *(a and b)
	9. Design *(a and b)
	10. Implementation *(a and b)
	11. Use/running
	12. Briefdevelopment *(b)
	13. Design *(b)
	14. Implementation *(b)
	15. Use/running
	x
	x
	x
	x

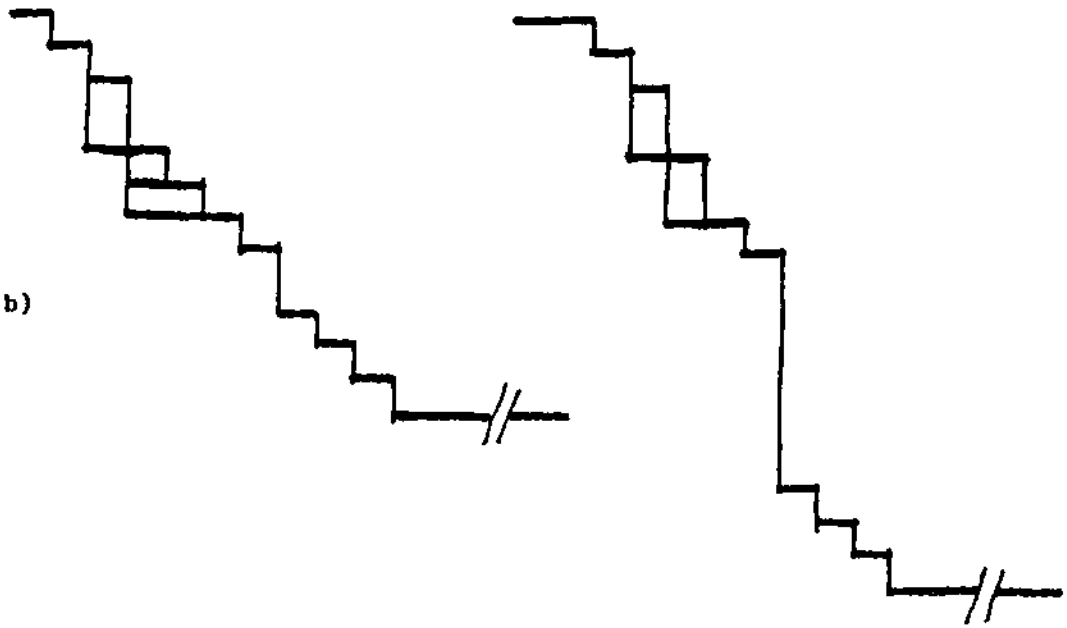

*) a. Primairy Brief, Design and Implementation.
b. Secondary Brief, Design and Implementation.
(see publication nr. 2).

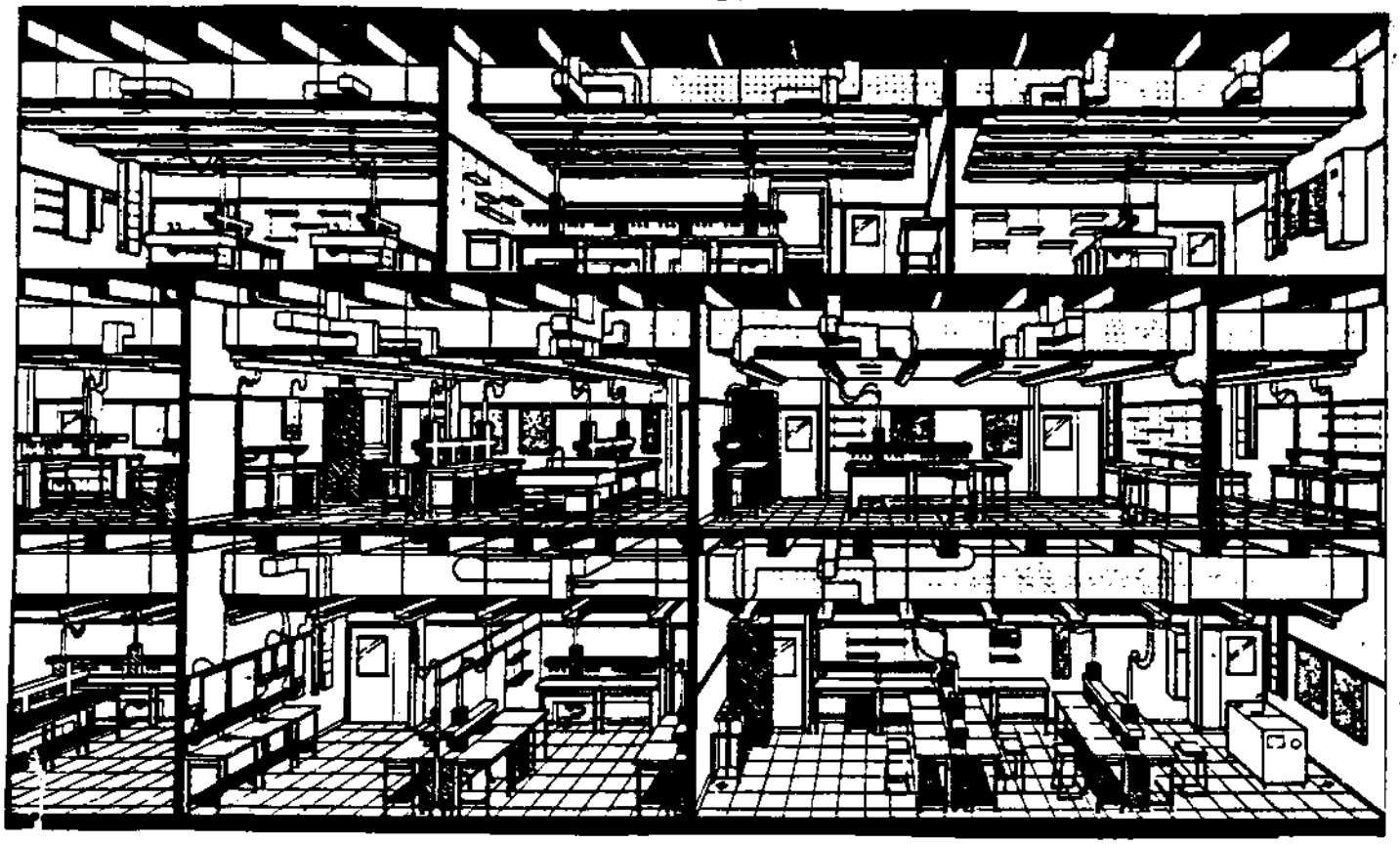

STRUCTURE

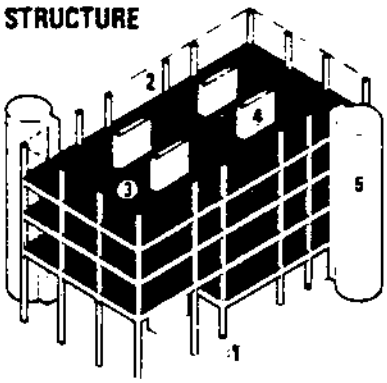

CHANGE PREDICTION
never
60 yr + fixed

1 foundations
2 columns
3 floors
4 vertical ducts
5 vertical circulation

SERVICES

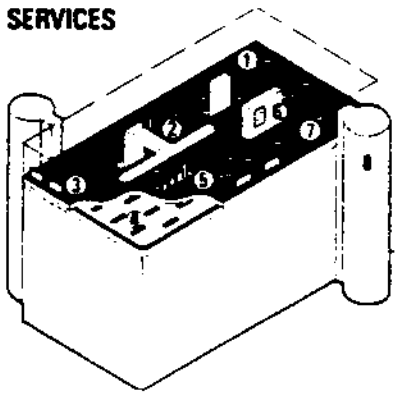

CHANGE PREDICTION
seldom
20yr +; fixed

1 drainage – riser
2 ventilation – branch
3 heating – outlet
4 lighting – outlet
5 water – riser
6 electricity – riser
7 floor hole
8 sanitation

SPACE DIVISION a

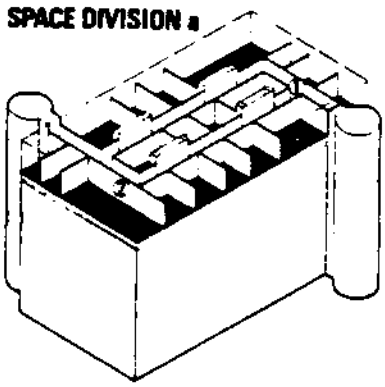

CHANGE PREDICTION
infrequent
7–20yrs

1 corridors
2 partitions

SERVICES

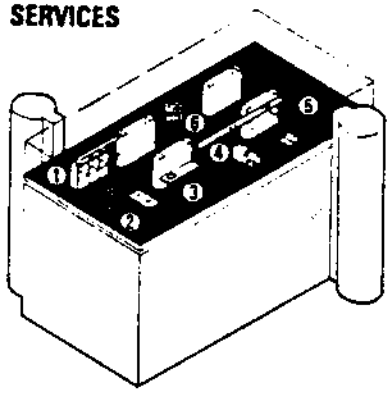

CHANGE PREDICTION
occasional
3–7yrs

1 fume extract – duct
2 drainage – floor hole
3 water – spine/duct
4 cooling water – beam
5 electricity – slung wire
6 vacuum – mobile pack

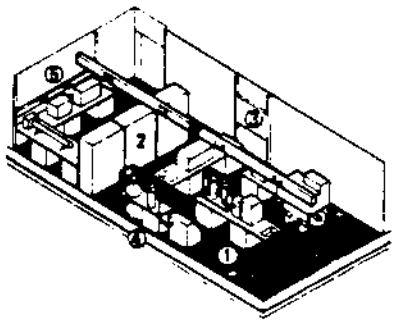

CHANGE PREDICTION
frequent / often 0–3yrs

1 bench
2 storage
3 display
4 rig
5 work zone

EQUIPMENT LOCATION b

Flexibility and Changepredictious

7. Developments in the Netherlands.

Though many important and interesting developments with regard to higher educational facilities have taken place recently and are expected shortly, the most striking ones have to do with changes in the educational policy, in the financing system, in the efficiency requirements and in the relations between the national government (Ministry of Education) and the institution (decentralization of authority and responsibilities).
In fact the developments in the nineties are completely focussed on decentralization, so that much attention will be given to this subject.

I. The eighties.

The policy changes for the Universities were focussed on changes in the educational structure, so that the average length of the study diminished.

This combined with dropping birthrates in the past, led to an expected decrease in studentnumbers in spite of the increasing participation of women. An increase of efficiency in the educational system was stimulated by a redistribution of tasks between universities resulting in a certain concentration of these tasks.
Almost all Teaching Hospitals were completely newly constructed.
In Higher Professional Education no shrinking is expected, on the contrary, a steady growth is going on.
The most important development is the almost total renewal of the educational system: fusion and concentration of institutions (from 400 to 75 at present) is still going on, a redistribution of teachingtasks and changes in teaching methods, financing, the institutional government and so on have taken place.
With regard to the costs of facilities especially the relatively strong growth of the recurrent costs required attention.
With regard to the external relationships the strengthening of the coöperation with industry and commerce became more and more relevant. For new and existing facilities the development of legislation with regard to environmental issues and labour circumstances pose new requirements; especially in laboratory buildings that are a few decades old these new requirements can hardly be accomodated.

- Procedures for investmentprojects are time-consuming.
- The investmentbudget is vulnerable.
- Little flexibility in financingpossibilities.
- Little incentives with regard to selling buildings and grounds.

Pro's
- Easy facility coördination possibilities between institutions.
- Limited financingcosts (interest).
- Financial flexibility for the Ministry of Education.
- Policy-objectives can be stimulated through investments.
- Professional inputs can increase quality and decrease risks.

Situation aimed at.

1. Financing of all investments should be as a part of the lumpsum.
2. Selling the economical property of the real estate to the institution.
3. Allow institutions to borrow large sums money.

The primary objective of the new situation is to increase efficiency by increasing reponsibilities and authority of the institution. The slimmed down Ministry of Education will focus its attention to policymatters and not anymore to managementmatters. This requires investments to be part of the lumpsum and the transfer of the economical property of real estate to the institution.

Secondary objectives of the new situation are
- a simple determination of the lumpsum, not taking into account the actual situation with regard to facilities;
- payment of the value of real estate to the state.

These objectives require:
- selling of the economical property of real estate to the institution. The method of establishing the value will ensure an equalisation of the different starting positions with regard to facilities. Good facilities have a high price, so that little money is left for new investments; bad facilities have a low price, so that enough money is left for the necessary new investments. In order to keep the system simple one price per nett sqm. is used with a deduction according to the age of the building; for a 30 year old building the price is nil. Of course the system is in fact much more complicated, as a number of specific situations has to be taken into account.

Contents

Bibliography

No.		Procedure
1	Adams, R. K. *Mission de normalisation des cités universitaires, Algérie; rapport.* (unpublished). Paris, Unesco, Educational Facilities Section, March 1974. 23p.	14 36
2	American Institute of Architects. *Architect's handbook of professional practice.* Washington, DC, 1971.	43 44 45 46 47 48 49 50 52 53 54 55 57 58 59 60 62 63
3	Architects' Co-Partnership. *Development plan for the University of Bristol.* Potters Bar (Herts., UK), n.d. 52p.	Introduction
4	College and university buildings; Design guide—Building investigation and planning: universities and colleges. *The Architects' Journal,* London, 10 January 1968. p. 101–116. (Information Library.)	Introduction
5	College and university buildings: architecture studios. *The Architects' Journal,* London, 31 January 1968. (Information Sheet No. 1566.)	Introduction
6	College and university buildings: glossary of terms. *The Architects' Journal,* London, 24 January 1968. (Information Sheet No. 1562.)	Introduction
7	Colleges of further education and colleges of education: explanatory notes and references. *The Architects' Journal,* London, 24 January 1968. (Information Sheet No. 1564.)	Introduction
8	Special colleges: explanatory notes and references. *The Architects' Journal,* London, 31 January 1968. (Information Sheet No. 1565.)	Introduction
9	Universities: Explanatory notes and references. *The Architects' Journal,* London, 24 January 1968. (Information Sheet No. 1563.)	Introduction
10	Site investigation and appraisal. *The Architects' Journal,* London, 25 November 1970. p. 1275–1279. (Information Sheet—Landscape 1.)	19
11	Architectural Association, UK. *University planning and design; a symposium.* Brawne, M. (ed.). London, Lund Humphries, 1967. 126p.	Introduction
12	Arup Associates. *Master plan for the Loughborough University of Technology.* Loughborough, University of Technology (Leics., UK), 1966, 143p.	25
13	Ashley, R. E.; Romney, L. C. *Planning standards, inventory and utilization data for higher education facilities in twenty-seven States; facilities comprehensive planning program.* Albany (NY), New York State Education Dept., Office of Higher Education, 1970. 75p.	Introduction 2 3
14	Asian Regional Institute for School Building Research. *Problems of university building in Asia.* (A brief note.) Colombo (Sri Lanka), n.d.	Introduction
15	Atanassian, L. S. *Iran—the reform of higher education.* (Mission of August–September 1968.) Paris, Unesco, June 1969. 43p. (Report No. 1290/EMS.RD/EDS.)	3 4 5
16	Baxter, A. W. *Capital outlay for higher education education; a study of current plant utilization and a ten-year projection of plant requirements for the public junior and senior colleges and universities in Colorado.* Boulder (Colo., U.S.A.), The Legislative Committee on Education Beyond High School, 1960. 54p.	2 3 11 20 30
17	Beynon, J. *Architectural programme—OOK Budapest.* (unpublished). Paris, Unesco, November 1973.	17 28 29 30 35 36
18	Beynon, J.; Brown, D. J.; Cerineo, M.; Herman, J. *Somali Democratic Republic: higher education.* (Mission of February–March 1973.) Paris, Unesco, 1973. 33p. + annexes. (Serial No.: 2964/RMO/RD/EP.)	23 24 25
19	Beynon, J.; Van't Loo, G.; Vickery, D. J. *Development of the Colombo campus.*	1 2 3 11

No.		Procedure
85	Nuffield Foundation, Division of Architectural Studies. *The design of research laboratories.* London, Toronto, New York; Oxford University Press, 1961. 211p.	Introduction
86	Onushkin, V. G. (ed.) *Planning the development of universities—I.* (An IIEP Seminar, Paris, 7–11 July 1969) Paris, Unesco, 1971, 318p. figs. tables.	Introduction 2 Primary Brief Introduction
87	Onushkin, V. G. (ed.) *Planning the development of universities—II* (Analysis of the questionnaire). Paris, Unesco, 1973. 272p., figs., tables.	Introduction 2 Primary Brief Introduction
88	Organisation for Economic Co-operation and Development. *Development of higher education 1950–57*: Vol. 1—Statistical survey. 1970. 858p. Vol. 2—Analystical report. 1971. 269p. Paris, 1970–71.	Introduction 4 5
89	Page, C. F., Grennway, H. (eds.) *Innovations in higher education*, London, Society for the Research into Higher Education, 1972. 97p.	16
90	Palmer, R. R., Rice, W. M., *Modern physics buildings: design and function.* New York (NY), Reinhold Publishing Co. 1961. 324p.	Introduction
91	Piele, P. K. *Use of computers in planning higher educational facilities*, Eugene (Ore., USA) Oregon University, 1972. 6p. (Educational Facilities Review Series No. 2).	Introduction
92	Pinnell, C., Wacholder, M. *Guidelines for planning in colleges and universities: Volume 4: physical plant planning, facilities studies.* Washington D.C. US Department of Health, Education and Welfare, Office of Education, July 1968, 125p.	Introduction
93	*Report on building life costs; Volume 5: building blocks.* Toronto, Council of Ontario Universities (The task force building life costs) Ministry of Colleges and Universities (Architectural Services) November 1971. 200p.	Primary Brief Introduction
94	Robert Mathews, Johnson, Marshall & Partners. *The proposed University of Bath, a technological University: development plan: report No. 1* Prepared for the Bristol College of Science and Technology. Bath University Press (UK) 1965. 123p.	13 14 22 23 24 25 29 31
95	Romney, L. C. *Higher education facilities inventory and classification manual.* Boulder, (Colo., USA) Western Interstate Commission for Higher Education, and National Center for Higher Education Management Systems. December 1972. 160p. (Technical Report 36, final review edition).	2 20 29 30
96	Royal Institute of British Architects. *Architect's Job Book; stages A-F. Job. Ref. Architect's Job Book; stages G-M; Job. Ref.*, London RIBA Publications Ltd. 1969. 160p.	Introduction 27 34 Primary Implementation Introduction 42 43 44 45 46 47 48 49 50 Introduction Secondary Implementation 51 52 53 54 55 57 58 59 60 62 63
97	Royal Institute of British Architects (RIBA) *Architectural practice and management: RIBA handbook.* Powell, John, (ed), London, RIBA Publications, Ltd. 447p.	Primary Implementation Introduction Secondary Implementation Introduction
98	Schmerz, M. F. *Campus Planning and design.* New York (NY), McGraw-Hill Book Co., 1972. 350p.	Introduction
99	Simmonds, M. F. *Accommodation standards for educational buildings.* Garston (Watford, UK), Building Research Station, Overseas Division, April 1971. 120p. (photocopy).	11 30 36
100	Sloman, A. E. *A university in the making; the Reith Lectures 1963.* London, the British Broadcasting Corporation, 1964. 90p.	13 14
101	State University Construction Fund. *Guide for campus planning.* Albany (NY), State University of New York, n.d. 70p.	19 22 23 24
102	Stone, P. A. *Building design evaluation: costs-in-use.* London, E. & F. Spon Ltd., 1967. 210p.	Primary Brief Introduction 29 31 32 36 37 39 40 43 44 45 52 53 54 63

Introduction

Those who plan new facilities for higher education are frequently doing so for the first and only time. It is sometimes a very lonesome adventure as the planner tries to discover what the space requirements will be for each of the myriad of activities which take place in a higher-education institution: teaching, research, housing, study, recreation, etc. And each one of these makes further demands for spaces to accommodate supporting services.

The frequent reaction of the planner is to begin searching for standards or norms which have been established elsewhere and which could be directly applied to his problem. Unfortunately, higher-education institutions tend to be unique. They vary in site, in course offerings, in the academic level of instruction given, in the number of contact hours per week of both students and staff. Some institutions are primarily residential while some serve students who live at home or work part time. Research may be the intellectual cornerstone of one university while in another it is discouraged as being a costly diversion from the main mission of teaching.

Some countries have succeeded in establishing sets of standards which can be applied to groups of similar institutions and these are much sought after by the inexperienced planner. However, in practice, these standards are often difficult to apply directly because they provide too much or too little information for his immediate needs. The issue may be to determine an approximate total area for an engineering faculty, yet the standards for engineering faculties that are most easily obtained concern layouts of individual laboratories.

In the more industrially advanced countries, it is relatively easier to find other people or institutions which have recently been through a planning or construction programme than in less developed countries where the higher-education institution under consideration is usually among the first to be planned around that country's needs.

The earlier Unesco publication, *Planning Buildings and Facilities for Higher Education*, deals exclusively with the planning process, endeavouring to help the inexperienced planner understand the various cycles in the process of planning higher-education institutions and realize these plans. The material in the present work is a supplement to the previous publication and is presented in a way which will overcome, to the maximum extent possible, the problems referred to in the earlier paragraphs.

A substantial amount of thought has been given to presenting technical information in such a way that it might be considered to be comparable. However, in going through the great amount of material available, it became apparent that this could be done without introducing unacceptable distortions in the data. We have chosen therefore to merely share with the readers some of the clearest and most useful material that has come to our attention. We present it here in the same form as it was found in the original sources. Some minor editing has been made to ensure that the material is self-explanatory and conforms to Unesco's practice. Also, all dimensions given in feet and inches have been converted into metric measures. We have tried to include information from around the world. We wish to make it clear to the users of this book that we have not attempted to establish international standards for higher-education facilities. Rather, this material should be used as a reference against which to check the planning standards that have been derived around the specific needs of a particular institution. The user will find that there are substantial differences (sometimes from three to four times) between the standards used by two different countries. If the user finds it necessary to understand more fully these differences, he should obtain the complete works (for which we give the references) or contact the national agencies concerned.

The user may also find that some of the materials included date back ten or more years. This has been deliberately done because we feel that the information therein is of particular value to the intended users of this publication. Planning standards tend to evolve in the country which developed them as do the social, academic and economic situations that led to the creation of

UNESCO : HIGHER EDUCATION FACILITIES DATA SHEET

PREPARED BY E. Almonte — DATE 1977

TITLE Recommendations made by U.G.C. for different types of buildings — PAGE Appx I

SOURCE — DATE 1076

INSTITUTION University Grants Commission - India

SUBJECT Recommendations for the construction of Students Hostels.

ROOM TYPE: SLEEP/STUDY WITHOUT TOILET/BATH - TOILET/BATH (910, 919)

SUMMARY OF IMPORTANT RECOMMENDATIONS REGARDING CONSTRUCTION OF HOSTELS.

2.2 Living rooms are to be arranged in such a way that they get the maximum benefit of the prevailing breeze and avoid as much as possible of western exposure.

2.4.6 An area of 85-90 sq.ft. (7.9 to 8.4 m2) for single student room, 75-80 sq. ft. (7.0 to 7.4 m2) per student for two students and 70-80 sq. ft. (6.5 to 7.0 m2) per student for a three student room would be adequate for an undergraduate hostel. For post-graduate and research students the room area should not exceed 100 sq. ft. (9.3 m2) per student.

2.6.2 Dining area should be designed to accommodate not more than two-third strength of the hostel at the rate of 10-12 sq. ft. (0.9 to 1.1 m2) per person and kitchen-pantry area at the rate of 5-7 sq. ft. (0.5 to 0.7 m2) per student.

2.6.6 The following provision for toilet facilities are recommended :

(i) W.C. .... One per 10 men students / 8 women students

(ii) Urinals .... One per 8 students (new)

(iii) Wash basins .... One per 8 students

(iv) Bath with a shower One per 8 men students / 6 women students

2.7.1 Area for common room may be 500-650 sq.ft. (46.5 to 60.4 m2)

2.11.3 It should be the endeavour of architects and planners to plan the hostel in such a way that the built up area per student is generally not more that 2.3 to 2.5 the floor area per student within the room.

3.2.2 Increase in the working stress of concrete alone cannot lead to economy unless the working stress in steel is also corespondingly increased.

3.2.3 Economy in reinforced concrete framework depend to some extent on the judicious choice of the concrete mix for the various components. It is advantageous to use mix 1: $1\frac{1}{2}$: 3 or

.../..

SABRIA file
Copy
Structure.

A.

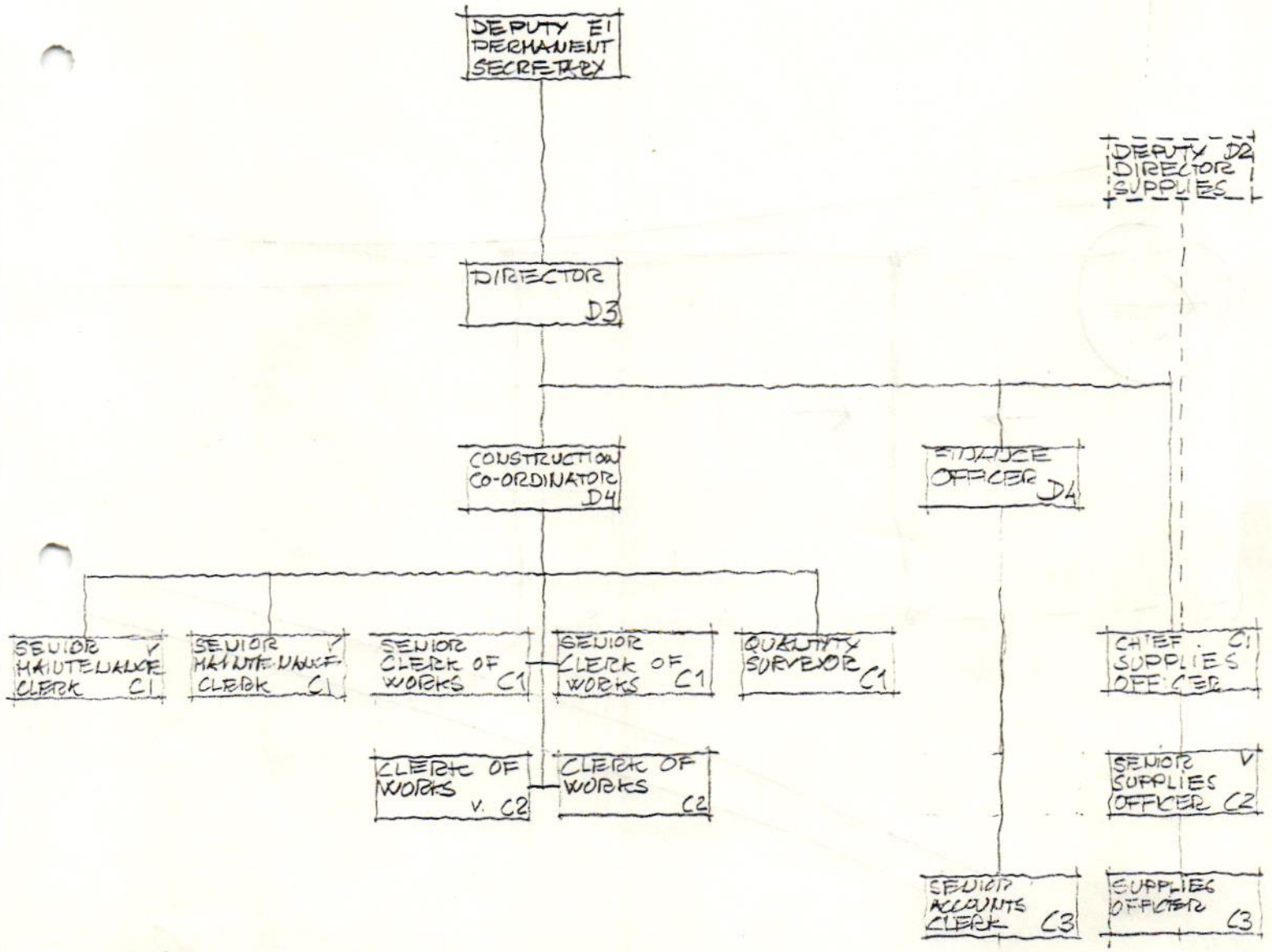

B.

SENIOR TYPIST (1) B2

ADMIN ASSIST. 1

ACCOUNTS CLERKS (6) B

STORE KEEPERS (3)

INDUSTRIAL CLASS	DRIVERS	7
	WATCHMEN - CLEANERS - GROUNDSMEN	13
	LABOURERS	20
	MESSENGERS	1

Programme

Sunday - Apr. 18: Afternoon Arrival
18.00 - Registration

Monday - Apr. 19:
09.00-10.00 - Opening of the Seminar
Addressed by:
- Arch. David Reznik
  Chairman of the Israel Inst. of Architects & Town Planners
- Dr. Gideon Ben Dror, Sen.Ad., Director of the Ministry of Education & Culture.
- Arch. Jannis Michail, Sec. of the U.I.A. Working Group "Educational and Cultural Spaces".

10.00-10.15 - Coffee Break.
10.15-13.30 - Touring Jerusalem and Vicinity.
13.30-14.30 - Lunch.
14.30-16.00 - Presentation of the Key Papers.
16.00-16.15 - Coffee Break.
16.15-18.30 - Presentation of Papers.
21.00 - Reception

Tuesday - Apr. 20:
09.00-11.00 - Presentation of Papers.
11.00-11.15 - Coffee Break.
11.15-13.00 - Presentation of Papers.
13.00-14.30 - Lunch.
14.30-16.00 - Presentation of Papers.
16.00-16.15 - Coffee Break.
16.15-18.30 - Presentation of Papers.
21.00 - "Meet the Israeli"
- The members of the Working Group will be invited to the homes of Jerusalem Citizens.

Wednesday - Apr. 21:
08.00-21.00 - Visit to several Elementary Schools in Israel.

Thursday - Apr. 22:
09.00-11.00 - Workshop.
11.00-11.15 - Coffee Break.
11.15-13.00 - Workshop.
13.00-14.30 - Lunch.
14.30-16.00 - Workshop.
16.00-16.15 - Coffee Break.
16.30-18.30 - Workshop.
20.30 - Farewell Dinner.

Friday - Apr. 23:
09.00-11.00 - Closing Session - Discussion and Summing up.

LESOTHO

MINISTRY OF WORKS
ARCHITECTURAL BRANCH
P.O. BOX 330
MOSHOESHOE ROAD
MASERU 100
LESOTHO

Tel: (09266) 323761 (International (266)
Fax: (09266) 310125 (International (266)

Our Ref: W/A/A/34

To: GABORONE, BOTSWANA
MR. DAVID YOUNG
PRESIDENT SADCC UA
PLOT 6406, BROADHURST

Fax No: 09267 - 372800

From : C.K. LEBONA, CHIEF ARCHITECT

Date : 18 FEBRUARY 1993

No of Pages (including this one): 1

FAX MESSAGE

SADCC UA COUNCIL MEETING

Your fax dated 8th January 1993 on the above refers. Regret no chances for meeting on either dates. We are holding LAESA AGM. Thursday 25th February and Lesotho has elections Saturday 27th March.

Yours sincerely,

CKLebona

C.K. LEBONA
(CHIEF ARCHITECT)

cc. J. Wasserfall- FAX: 09264-225655
T.N. Ntlatlapa - LAESA

DAVID YOUNG, ARCHITECT
Private Bag 00120, Gaborone
(+267) Phone 371181 Fax 371181 372800

Plot 6406

Broadhurst Industrial

SADCC UA
P/Bag 00120
Gaborone

RE: SADCC UA

(AOkp)56

STATEMENT OF ACCOUNT AT 30TH JUNE, 1993

date	details	debit	credit	balance
31/10/92	Account no. 92/1	129.22		129.22
			CURRENT BALANCE:	P129.22

Fees billed to date: Disbursements billed to date: P129.22

David Young
SAD-(A2ra)07

cc: File

David Alexander Young, B. Arch (Natal), MBIDP

(AOKp)56

1.00 URBAN UNIVERSITY V RURAL CAMPUS

①

THE GROUP WISHED TO REINFORCE THE VIEW THAT QUALITY OF EDUCATION IS ONE OF THE SINGLE MOST SIGNIFICANT FACTORS IN ESTABLISHING THE AWARENESS OF QUALITY IN OUR GLOBAL FUTURE, IN ITS BROADEST SENSE AND IN THE SPECIFIC OF ARCHITECTURE AND THE ENVIRONMENT.

UNIVERSITIES ARE STRESSING IMPORTANCE OF OUTWORD CONNECTIONS WITH SOCIETY.
NO SINGLE SOLUTION TO THE CORRECTNESS OF 'CITY OR CAMPUS'. THEY DEPEND ON THE DIFFERING FACTORS OF EACH OPPORTUNITY AND CIRCUMSTANCE

* EXTENDING INTO DEVELOPING COUNTRIES WITH PARTICULAR PROBLEMS.

PRINCIPAL FACTOR IN EITHER OPTION IS 'CONNECTION'

IN THE CITY OPTION THE GATHERING OF STUDENTS FROM VARIOUS FACULTIES AND DEPARTMENTS TO A MEETING POINT OF LEISURE AND REST.
IN THE CAMPUS A SIMILAR CONNECTION BUT WITH THE ADDED NEED FOR A TRANSPORTATION SYSTEM TO THE CITY CULTURE.

THE UNIVERSITY IS A COMMERCIAL OPPORTUNITY BOTH IN CITY OR CAMPUS.

INTERACTION OF COMMERCE AND INDUSTRY INTO THE PHYSICAL BUILDINGS AND LIFE

3.00 BUILDING RESTORATION AND CULTURAL PRESERVATION

RESTORATION OF SIGNIFANT HISTORICAL BUILDING FOR EDUCATIONAL USE INEVITABLY INFLUENCE CULTURAL AWARENESS AND PRESERVATION.

PARTICULARLY IN CITY LOCATIONS THE REDEVELOPMENT AND REHABILITATION IN DERELICT SITES AND BUILDINGS ACTS AS CATALYST FOR LONGER TERM DEVELOPMENT. ESSENTIAL LIFE AND REGENERATION OF CONFIDENCE IN DANGEROUS AREAS BRINGS THE RETURN OF BUSINESS, EMPLOYMENT AND POLICE TO SECURE AND STIMULATING CITY LIFE.

BENEFITS ACHIEVED BY LOW COST LAND AND IN MANY AREAS EXTRA FUNDING FROM GOVERNMENT BODIES AND HISTORICAL INSTITUTIONS

IN GENERAL, THE COMMUNITY FEEL AN AFFINITY WITH BUILDINGS OF HISTORICAL QUALITY AND ENJOY LIVING AND WORKING IN A REMODELED BUT RESTORED ENVIRONMENT.

ON ENERGY SAVINGS AND ESTABLISHING A UNIQUE ARCHITECTURE.
REDUCTION OF PRIVATE TRAFFIC AND INTRODUCTION OF PUBLIC TRANSPORTATION.
BUILDINGS DO NOT ALWAYS RESPOND TO CLIMATIC AND ENVIRONMENTAL CHARACTERISTICS OF SPECIFIC LOCALISED OPPORTUNITIES. THESE GO BEYOND LEGISLATION AND REQUIRE INTELLIGENT AND INNOVATIVE ARCHITECTURE.

SENSITIVE SITE SELECTION TO AVOID AND PROTECT AGRICULTURAL SPACES and nature AND ARCHEOLOGICAL SITES. AND THE AVOIDANCE OF CONTACT WITH UNFRIENDLY INDUSTRIAL ACTIVITY unless this contact is required by research.

~~BUILDINGS TO RESPOND NATURALLY~~

TO ENVIRONMENTAL SPECIFICS THUS PRODUCING A MORE REGIONAL ARCHITECTURE. IN WHICH STUDENTS AND STAFF LIVE COMFORTABLY

A FULLY EXPERIENCED AND QUALIFIED ESTATE MANAGER REQUIRED WITH PROPER SUPPORT AND ACCESS TO SPECIALISTS AND CONSULTANTS.

MULTI USE OF UNIVERSITY FACILITIES MEANS: A BIGGER INVESTMENT AND BETTER QUALITY IN MATERIALS AND DETAILING TO ENSURE LONG LIFE.

INCENTIVES NECESSARY TO ENSURE THAT SPACE MANAGEMENT IS CONTROLLED. CONSIDER SPACE CHARGING WHICH IS INCREASINGLY USED IN INDUSTRY AND COMMERCE. SPACE HAS COSTS – MAINTAINANCE AND UPKEEP WITH AN IMPLIED COST IN REPLACEMENT. AN OPTION WOULD BE TO HAVE A SPACE 'COST NORM' AND CHARGE ONLY FOR SPACE OCCUPIED ABOVE THIS 'NORM'.
IMPORTANT ISSUE IS TO CREATE AN EXPLICIT AWARENESS OF THE USE OF COST OF SPACE.

INVESTING IN A GOOD STUDENT IS INVESTING IN OUR FUTURE AND THE INEVITABILITY OF A BETTER BALANCED CIVILISATION.

An effective design means to meet the challenge of a good brief.

building

If the architect receives a defective brief, it may be necessary to challenge it. The final design should be one that is appropriate to the unique conditions of and well defined a given site. The campus architect, if there is one, has the task of interpreting back and forth between the client user and the designer in search of optimal solutions.

selecting architects →

1. Urban University vs Campus

Briefs.

- Urban universities have a different character than do isolated, self contained campuses. Briefs should include sections on how a building locks into the urban fabric, and creates an environment for enhanced inter-personal contacts within the university.
- Individual buildings can be located so as to create a university neighborhood, open to all walks of life. A good brief will advice on how to do this.

residential areas educate to normal life

Design

- University policy makers and planners may decide to use the university as a tool for urban renewal. Building designers need to ensure that designs improve the appearance of their neighborhoods and contribute to the richness of urban life.
- Designs for urban institutions on constricted sites should include places where students can meet and interact.
- It may be more of a challenge to find the most appropriate architectural style for an isolated campus than for an urban building that can be related to its neighbors.

Design.

- The built educational environment for should always be livable and express a certain dignity for learning even if the space is only planned for temporary use.

- The need to design large building envelopes does not ~~make good design impossible though~~ have to be an obstacle against making good designs that provide the ~~complexity of space~~ complex environments associated with urban life. ~~The~~ Architect must, however, not lose sight of the need to design environments suited for learning in the broadest possible sense. ~~The use of heavy and forbidding designs may be quite out of their proportions~~

- ~~Are not~~ Thanks to distinguishing the primary and secondary building levels, architects can ~~be constructing simultaneously~~ oversee construction of a building shell and space planning for the building interiors.

space and place
modern techniques in architecture & design
method available

- Building designs must provide for ~~extensive~~ eventual uses of information and other technology.

community use

- ~~The new technology may create the opportunity to move the teacher & the student decentralized institutions to another attempt in this direction~~

- Architectural competitions are often used to seek out the best designs for buildings and ~~construction~~ programmes as complex as those needed for ~~the~~ large, flexible buildings, some countries feel that an approach which examines the quality of architectural services available from a firm ~~was~~ is a better approach

sound ideas and new concepts

8

move

(Aug) 96

Rain-Water Drainage System	5 Points
Sewage System	5 Points

Total:	25 Points

Internal Component Group (75 Points)

Structure	30 Points
Roof	10 Points
Architecture.	5 Points
Cladding	5 Points
Comfort Conditions.	5 Points
Safety Conditions	5 Points
Interior Electrical	5 Points
Interior Sanitation Facilities. . .	5 Points

Total . . .	75 Points

D.6) The General Component value is obtained from the product between the corresponding Specific Value and its maximum General Value.

2.3.-**Degree of Deterioration Calculation for Educational Premises**

The Degree of Deterioration is the result of the Total of the General Points or Values of each Component it comprises.

<u>External Component Group</u>

External Areas.	A
Exterior Electrical Installetions	B
Drinking Water System	C
Rain-Water Drainage System.	D
Sewage System	E

ANNEX 1